ROMI®

A TRADITION OF INNOVATION

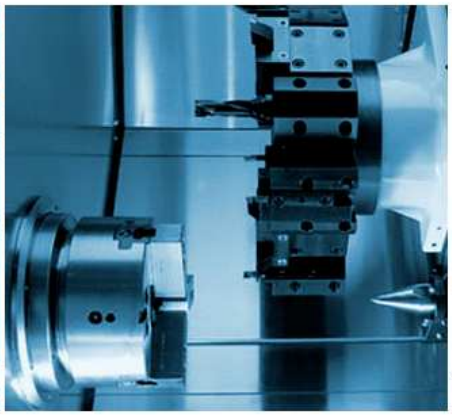

ROMI VTL 500R / VTL 500MR

Vertical Lathes

28/08/2013

ROMI VTL 500R

ROMI

SEV-MF

Vertical Lathe CNC

ROMI

SEV-MF

V	• VERTICAL
T	• TURNING
L	• LATHE
500	• Ø MAX. TORNEAVEL
R	• RIGHT / DIREITA

E

V	• VERTICAL
T	• TURNING
L	• LATHE
500	• Ø MAX. TORNEAVEL
M	• MILLING
R	• RIGHT / DIREITA

R • RIGHT / DIREITA

The definition of R (right / right) is according to the turret and the chuck, i.e., the turret is positioned on the right side of the chuck the center line .

VTL-R

The R version (VTL-R) combined with the future version L - left / left (VTL-L), form a machining cell (stage 10 and stage 20).

ROMI

SEV-MF

Competitors in Brazil

Model: VT450R/L
Manufacturer: Hwacheon

Model: V400 / V500R/L
Manufacturer : Doosan

Model: SKTV3R/L
Manufacturer : Hyundai-Kia

Model: SKTV5R/L
Manufacturer : Hyundai-Kia

Model: VT550R/L
Manufacturer: Hwacheon

Model: VL46A
Manufacturer: Honor Seiki

Objective

Develop a New Vertical Lathes, with turret to turn parts between 300 and 700 mm

Technical specification		ROMI VTL 500R	ROMI VTL 500MR
Capacity			
Maximum Diameter allowed	mm	620	
Maximum diameter to be machined *	mm	500	
Maximum diameter to be machined (recommended)	mm	390	
Maximum High to be machined	mm	668	620
Maximum High to allowed	mm	668	620
Travel “X”	mm	325	
Travel “Z”	mm	700	
Machine Weight (without chip conveyor)	kg	5.000	

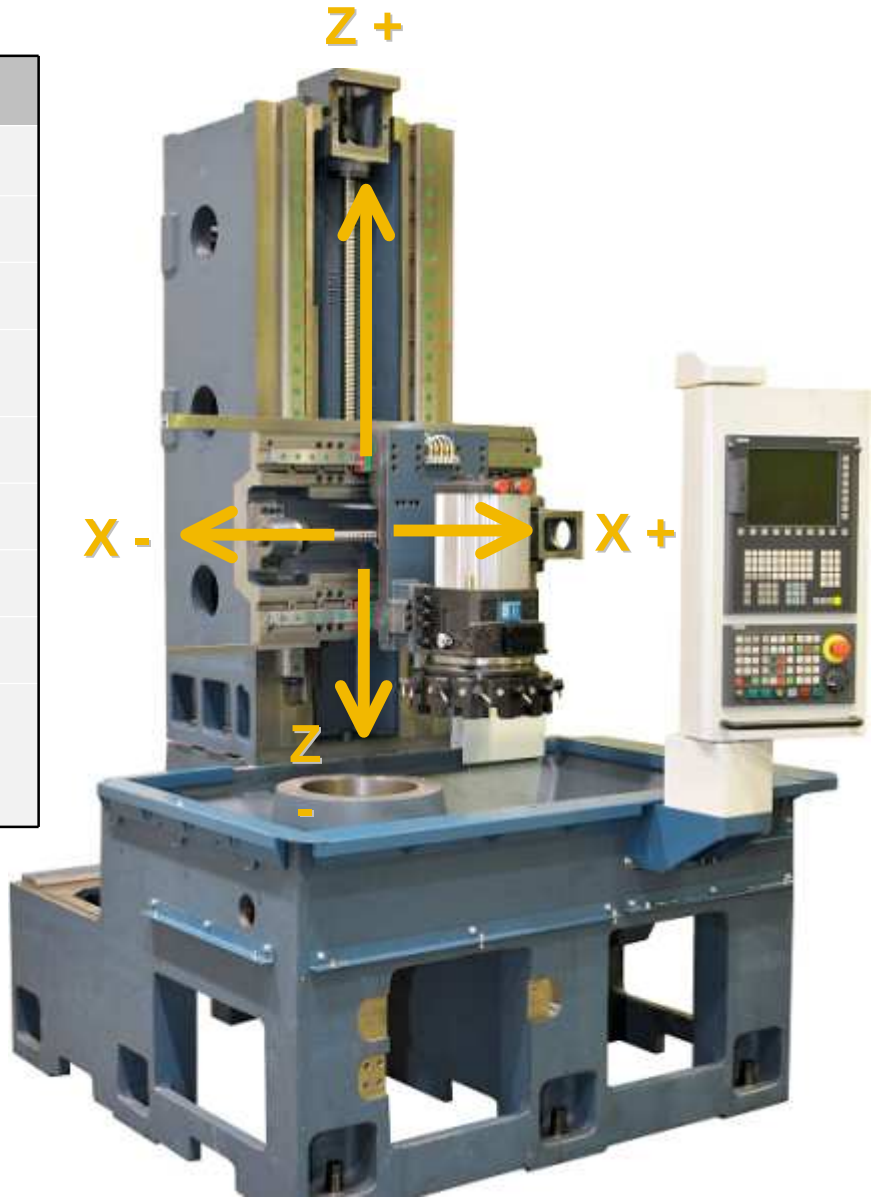

Objective

Develop a New Vertical Lathes, with turret to turn parts between 300 and 700 mm

Technical specification		ROMI VTL 500R	ROMI VTL 500MR
Capacity			
Maximum Diameter allowed	mm	620	
Maximum diameter to be machined *	mm	500	
Maximum diameter to be machined * (recommended)	mm	390	
Maximum High to be machined	mm	668	620
Maximum High to allowed	mm	668	620
Travel “X”	mm	325	
Travel “Z”	mm	700	
Machine Weight (without chip conveyor)	kg	5.000	

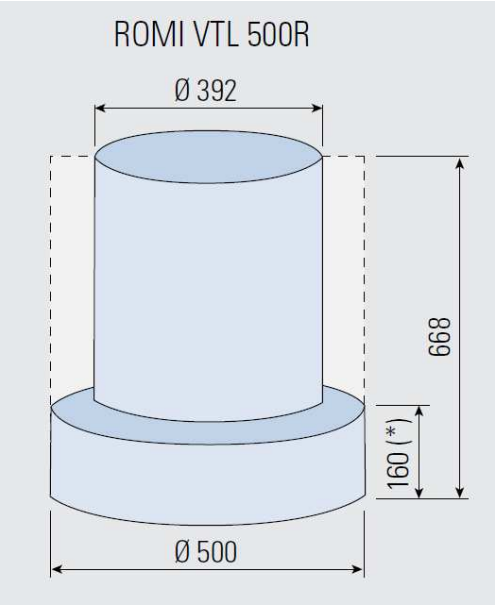

Headstock specification

SPINDLE	ASA	A2-8”
CHUCK DIAMETER	mm	315 ou 390
SPINDLE RANGE	rpm	2.500
MAXIMUM WEIGHT	kg	590

(*) Hydraulic Chuck is a settable optional (mandatory)

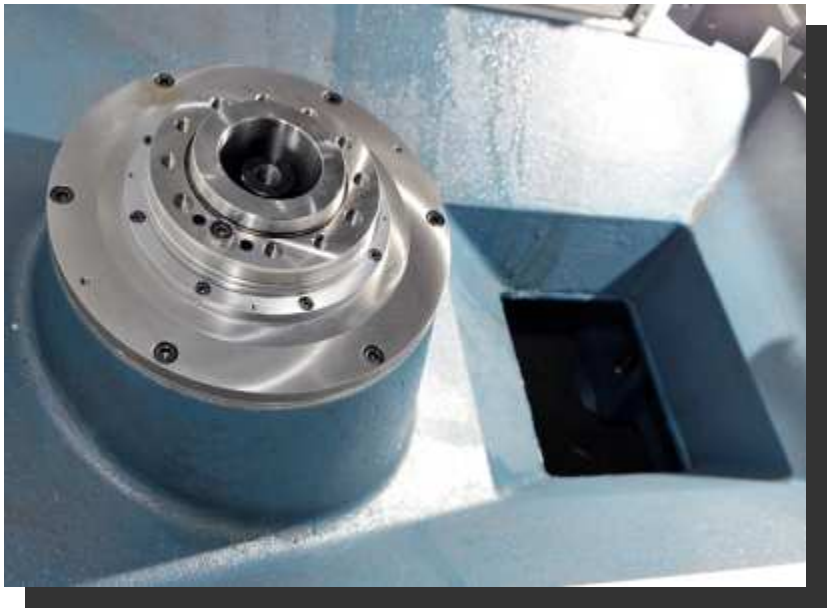

Chuck specification – SMW AUTOBLOK

Chuck totaly sealed against coolant and chips.

Ø 315:

- Máx. Pressure..... 42 bar
- Jaws Clamping force.....180 kN
- Máx. RPM..... 2.500 rpm

Ø 390:

- Máx. Pressure..... 48 bar
- Jaws Clamping force..... 210 kN
- Máx. RPM.....1.500 rpm

Hydraulic cylinder

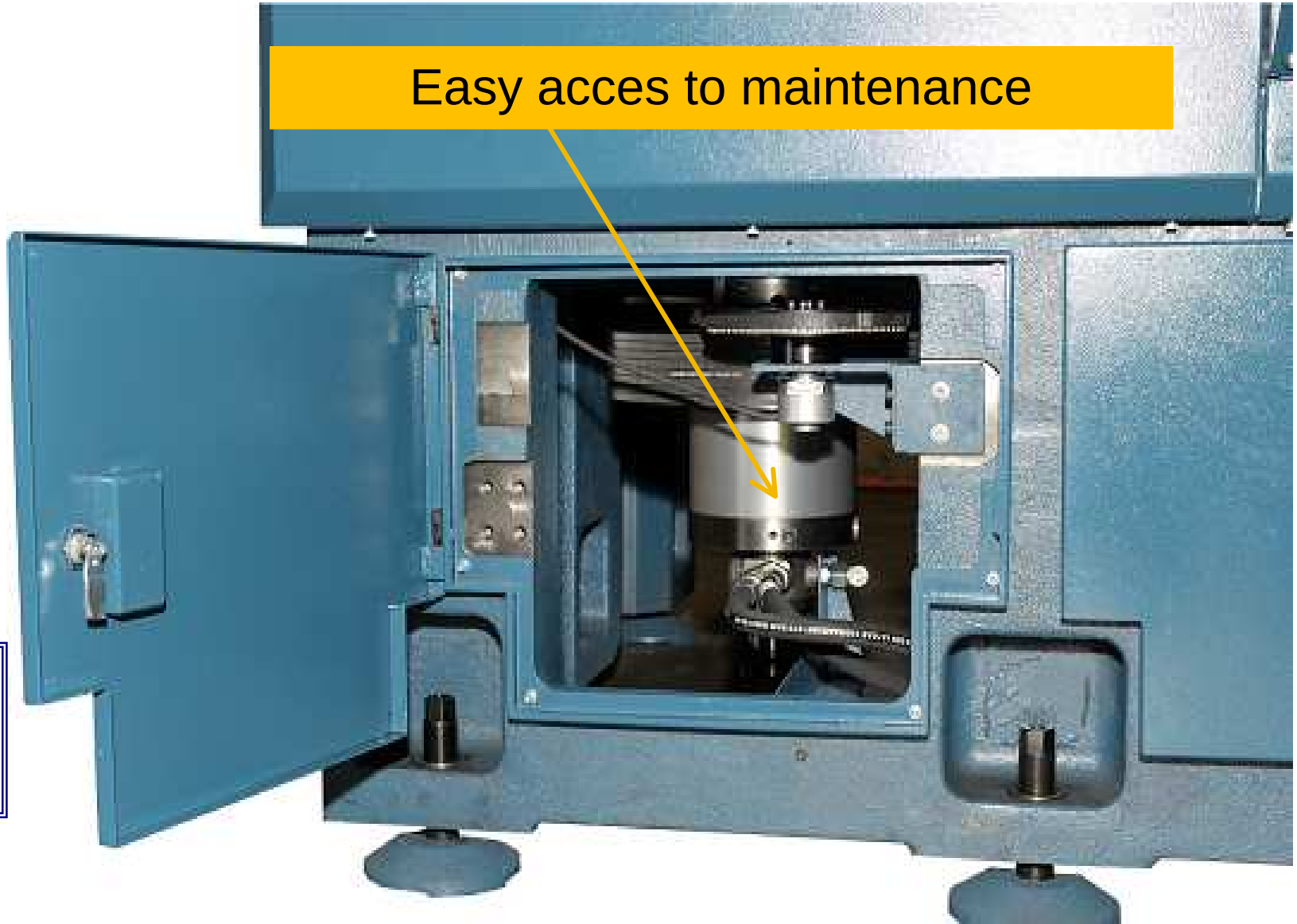

The same hydraulic cylinder for the chucks Ø 315 and 390mm

Cleaning system (for chips and coolant flow)

Protection: Avoid the entrance of chips and coolant inside the headstock

Power chart

ROMI VTL 500R / ROMI VTL 500MR

ASA A2-8" (regime S2 - 30 min.)

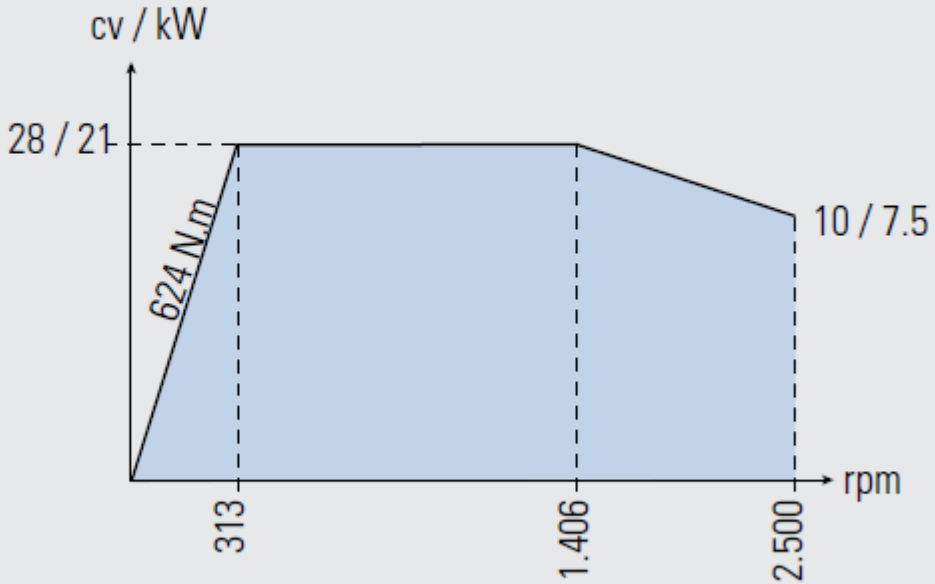

Power chart

ROMI VTL 700R / ROMI VTL 700MR

ASA A2-11" (regime S2 - 30 min.)

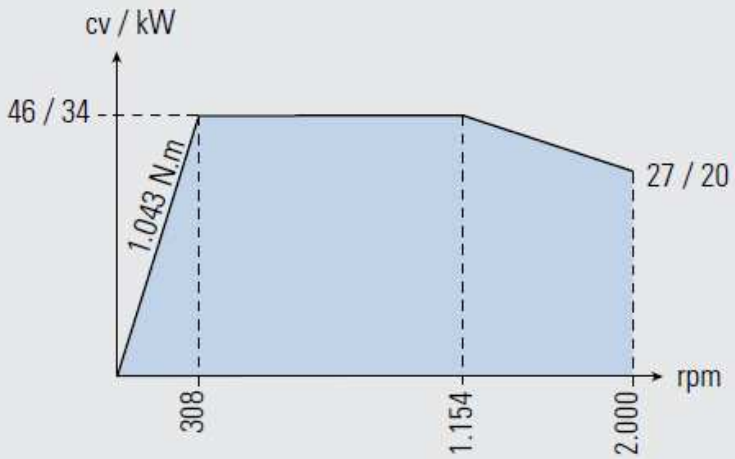

Ferramenta acionada (regime S2 - 30 min.) (*)

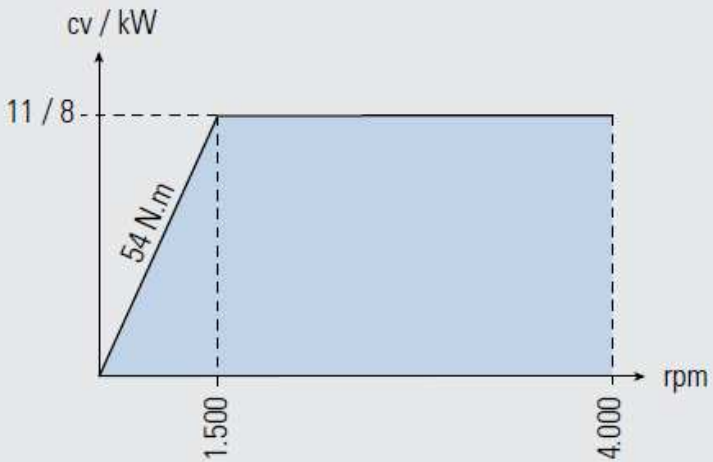

(*) Exclusivo para ROMI VTL 700MR

Equipado com Caixa de Redução (regime S2 - 30 min.) (**)

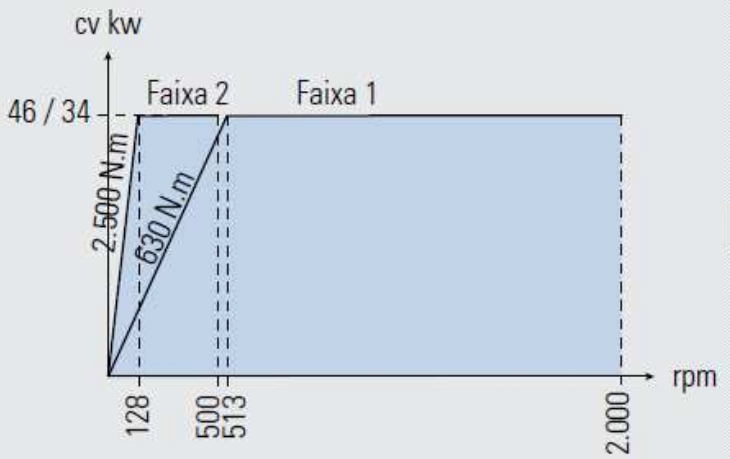

(**) Exclusivo para ROMI VTL 700R

Servomotors

Directly coupled to the ball screws **X** and **Z**.

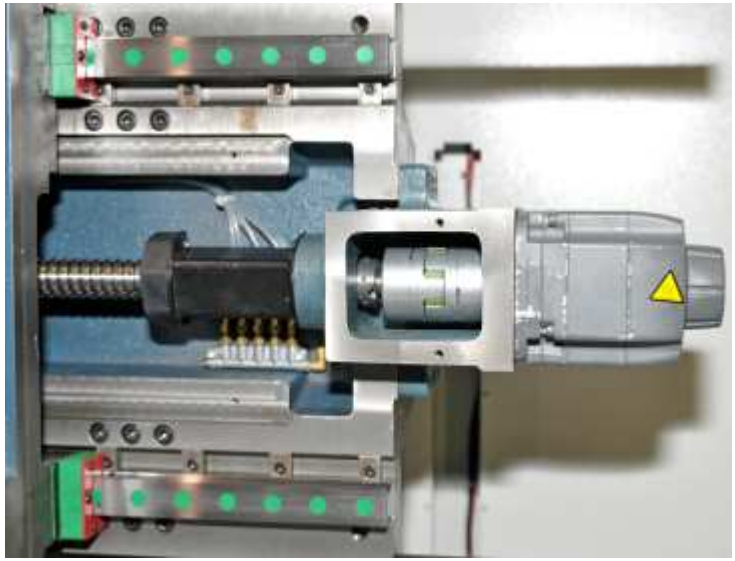

Servomotor - “X”

Servomotor - “Z”

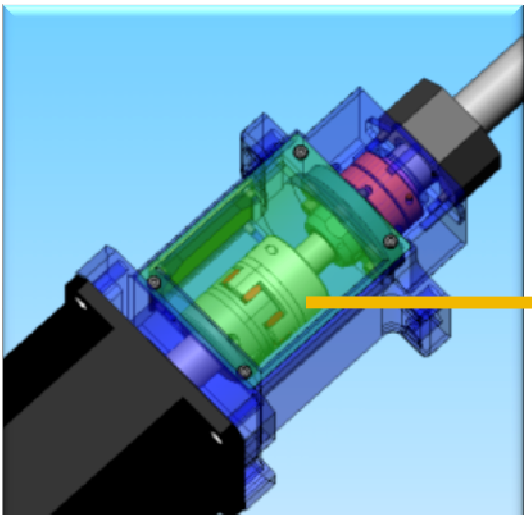

Better results of precision, positioning e repeatibility, as well a lower maintenence intervention.

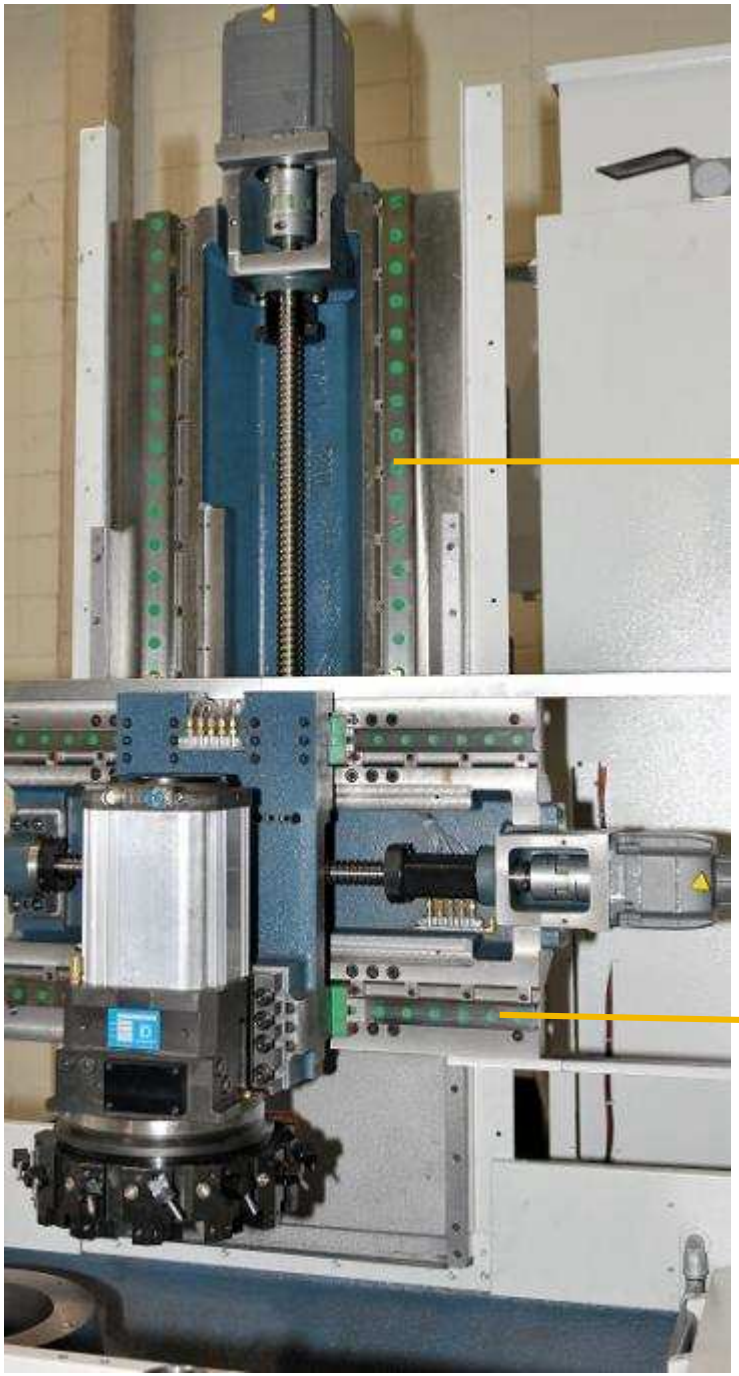

Transversal and longitudinal carriage with **linear roller guides** (More Rigidity)

Feedrate		
Rapid travel “Z”	m/min	30
Rapid travel“X”	m/min	30

Linear Roller guides

The rollers have a larger contact area than spheres, so it has higher carrying capacity (load) and rigidity.

X

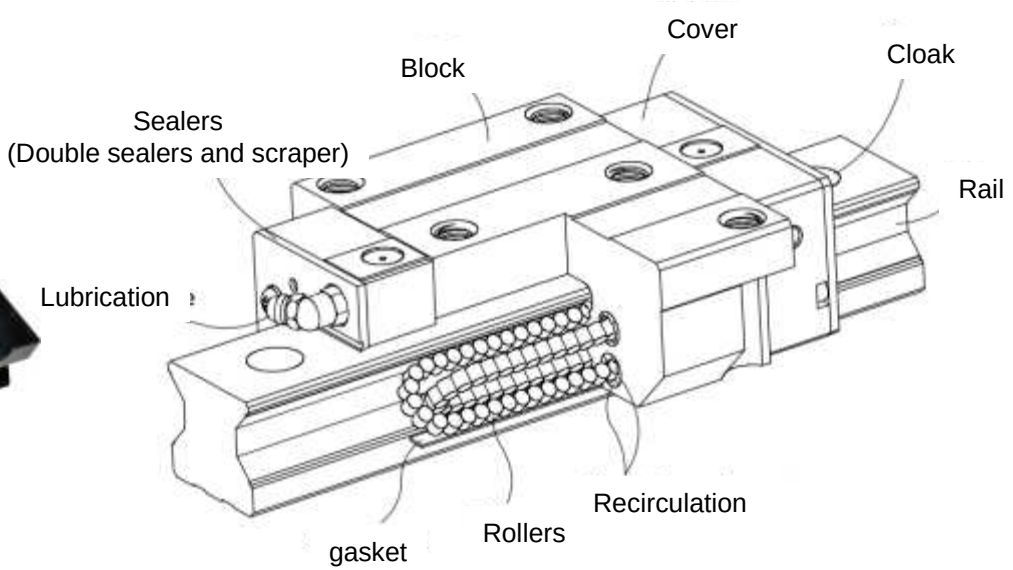

Linear Sphere guides

Linear Roller guides

Carryng capacity

Dynamic = approx. 20% bigger

Static = approx. 60% bigger

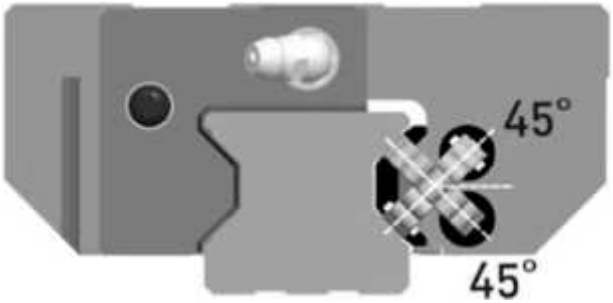

Comparative between linear guides with **spheres** versus **rollers**, subjected to the same load.

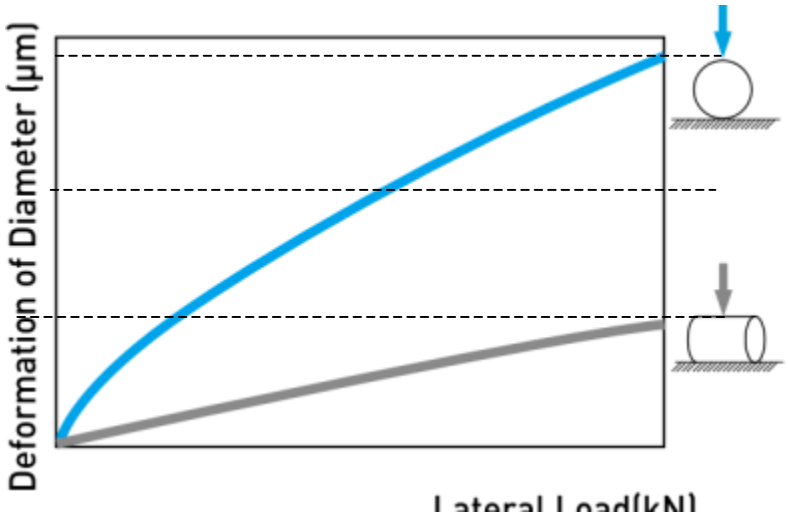

ROMI®

SEV-MF

Turret - DM20 Duplomatic

Techinical specification		ROMI VTL 500R
Turret		
Number of positions	un	12
Tool holder system (clamping)		Romi
Tool holder - external (section)	mm	25 x 25
Internal Tool holder (Ø)	mm	40

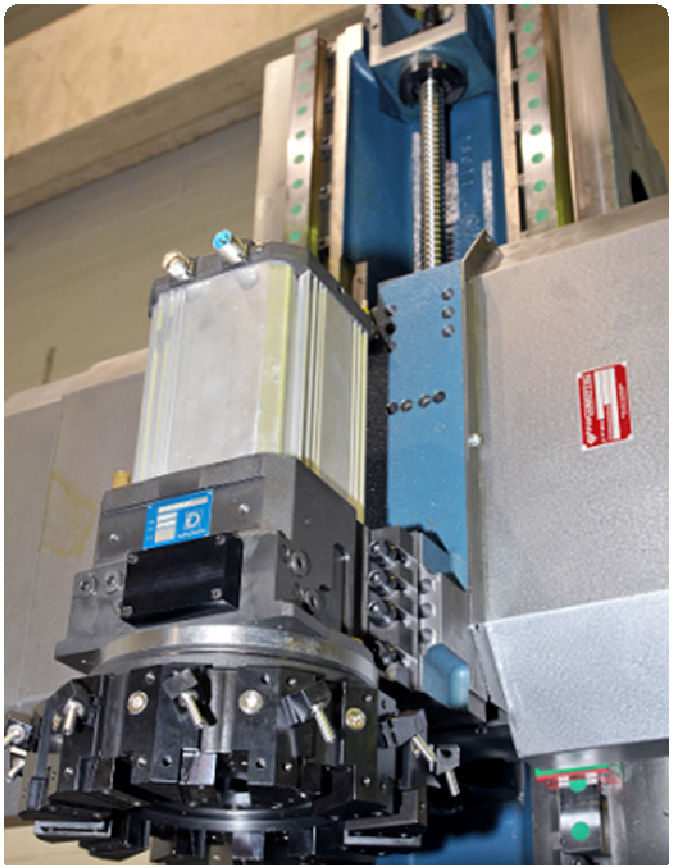

Turret type T servodriven, with direct coupling system of the motor on the mechanical part(built-in) and hydraulic campling.

The same turret of ROMI GL 350.

ROMI®

SEV-MF

BMT 65

Techincal Specification		ROMI VTL 500MR
Turret		
Number of positions	unit	12
Clamping system - Tool type		BMT 65
Tool holder - External	mm	25 x 25
Tool holder - Internal	mm	40
Tool holder - Driven tools - Axial	DIN 6499	ER-25 (Ø 3 - Ø 20 mm)
Tool holder - Driven tools - Radial	DIN 6499	ER-25 (Ø 3 - Ø 20 mm)
Driven tools RPM	rpm	4.000
Driven tools Motor	cv / kW	9 / 7
Driven tools Torque	N.m	42

Power Chart of driven tools:
(S3 40% - 10 min)

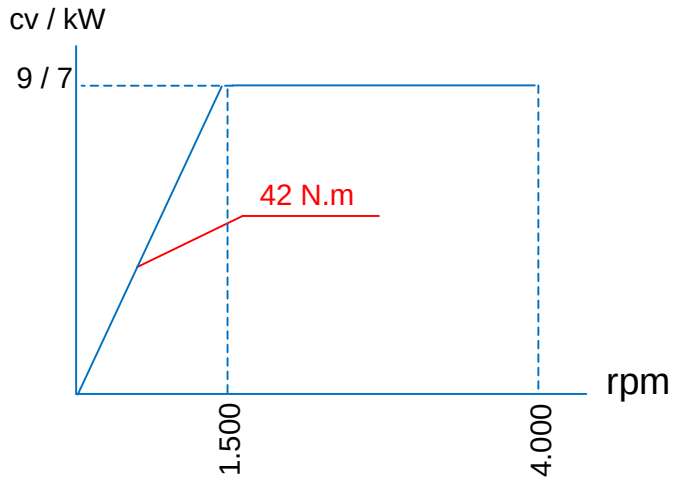

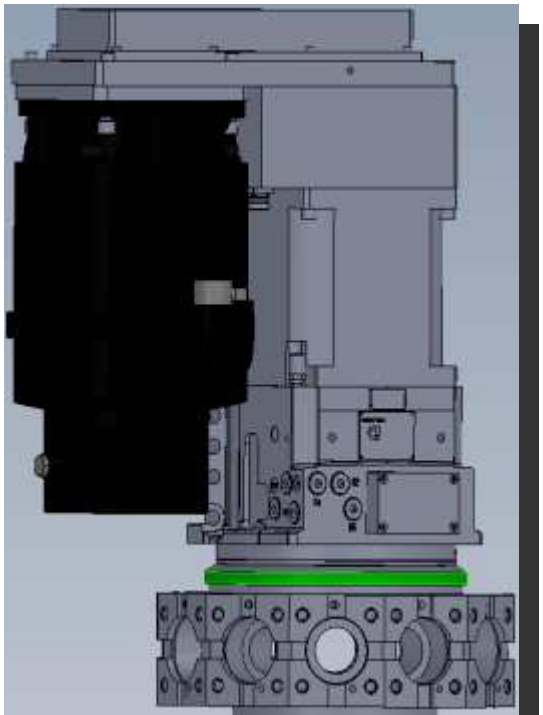

Turret type "M" servodriven, with direct coupling system of the motor on the mechanical part(built-in) and hydraulic campling.

Same turret of ROMI GL 350M.

ROMI®

SEV-MF

CNC Siemens 828D

Monitor LCD colorful 10,4”

Drives to:

- Card CF (Compact Flash)
- USB
- Interface Ethernet (100 Mbit/ Seg – TCP-IP)

10 softkeys
(Multi functions)

Operational panel (Handwheel)

(eq. Standard).

It has crank with pulse generator MPG (handwheel), emergency button, and JOG for the axis. It is equipped with safety buttons, which do not allow the handle to be triggered accidentally.
Benefíts: allows mobility to the operator, facilitating operations setup part and tool .

Benefits: great flexibility for loading programs and parameters.

Programs can be run directly from CF card or USB Drive.

•Ethernet connection between PC and machine.

ROMI

SEV-MF

Eletro-eletronic Kit - Siemens

- CNC (Siemens 828D)
- Servomotors
- Motor AC
- Drives

Motor AC Siemens

Servomotors Siemens

“ FULL” Siemens

Drives Siemens

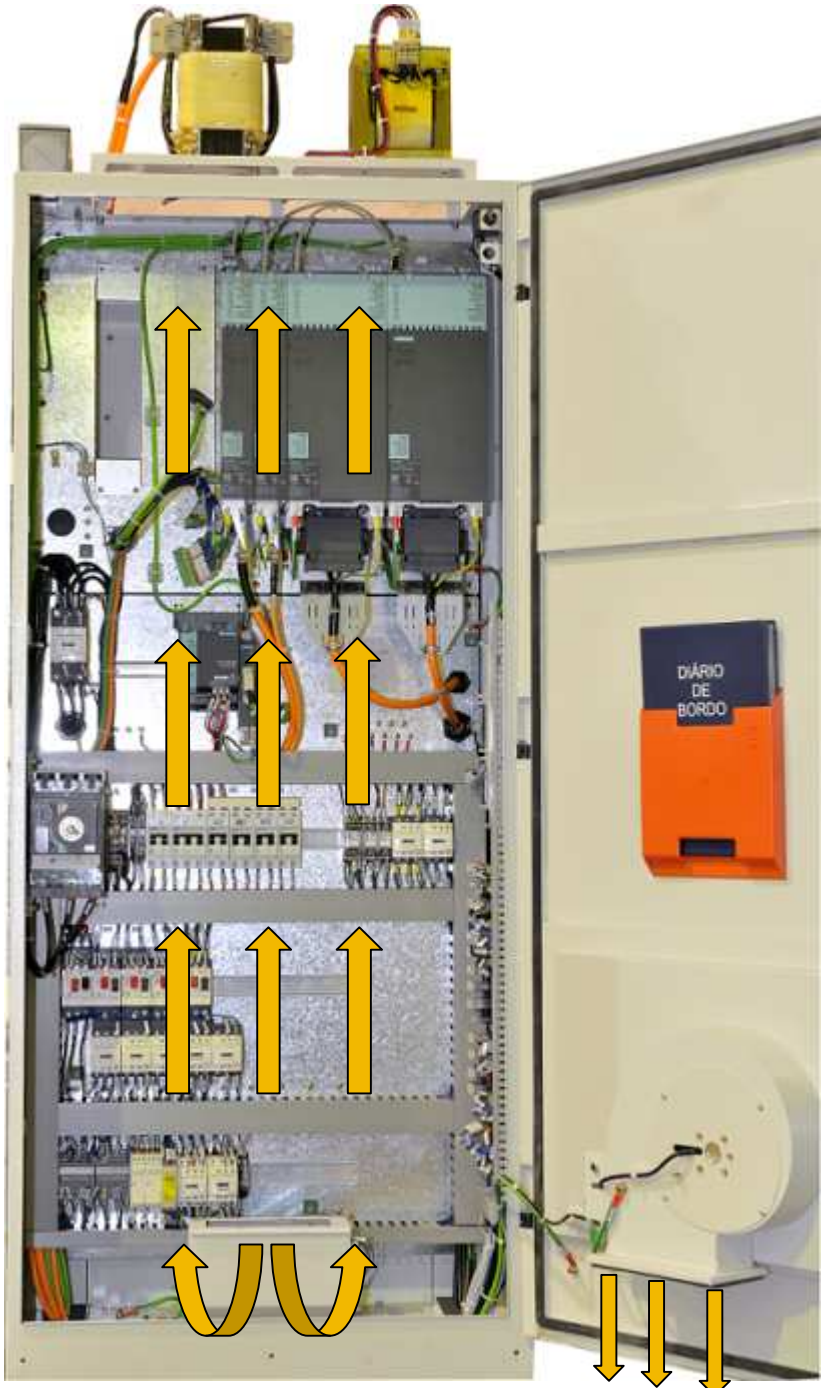

Air flow sensor

Electrical Panel with ventilation forced through ventilators.

ROMI

SEV-MF

Tubular Lamp with LED (std)

Ergonomic work area and optimal chip evacuation through cleaning system by coolant.

Hydraulic unit

Functions:

- Actuation of the chuck's hydraulic cylinder
- Turret clamp
- hydraulic devices

Technical specification - hydraulic unit	
Total Volume of the tank	41 liters
Minimal Volume of supply	33 litros
Oil type	ISO VG 32 (ONH-32)
Pressure	40 bar

Chip conveyor – TCE or TCA (optional)

Technical information	Chip conveyor - TCE
Type of chips	General chips
Belt width	235 mm
Expanded Volume removed	0,2 m^3/h
Chips transport speed	3 m/min.
Weight	290 kg

ROMI®

SEV-MF

Hydraulic and Lubrication system

Electronic pressure switch **EDS 3000** compact with digital indicator integrated.

Benefit: Improved accuracy for regulation of pression with +/- 0,5 bar, with maximum pression allowed 100 bar (of te pressure swtch).
Requirement of the standard NR-12.

Manometer for the main pressure

Chuck pression regulation

Socket of the Chucks Footswitch

Centralized lubrication system

All ball screws and linear guides of the axes are lubricated through a system consisting of a central lubrication unit, dosing, filter and pressure switch with fault monitoring by the CNC

Support of the cutting force

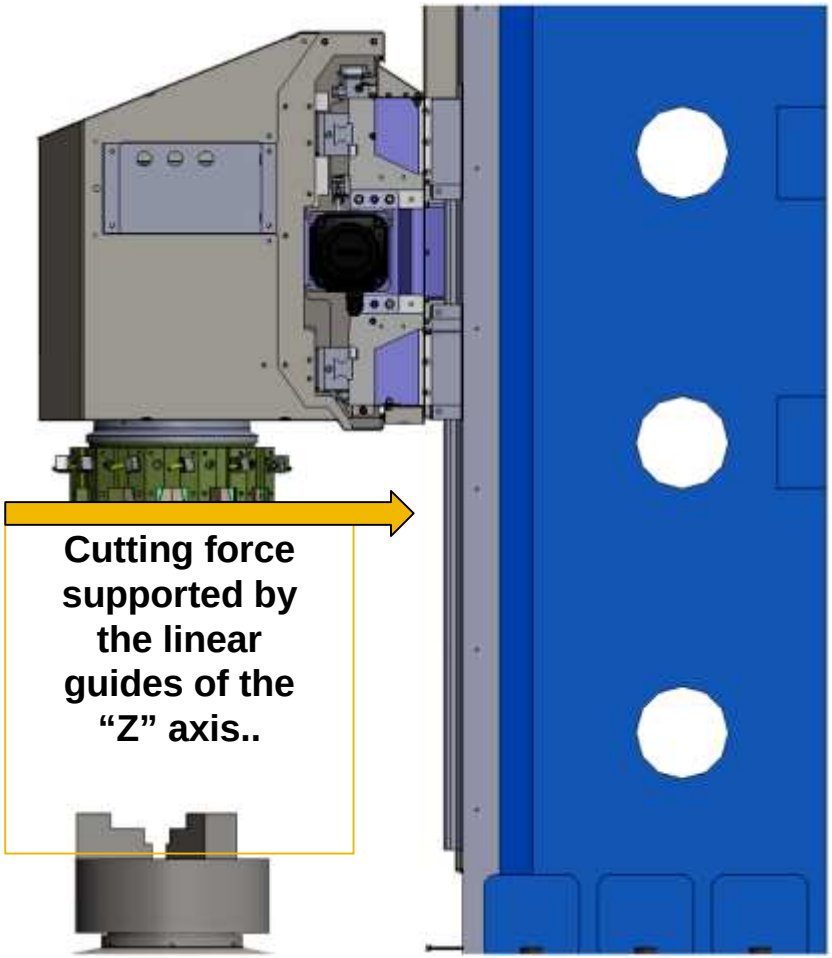

Illustrative image

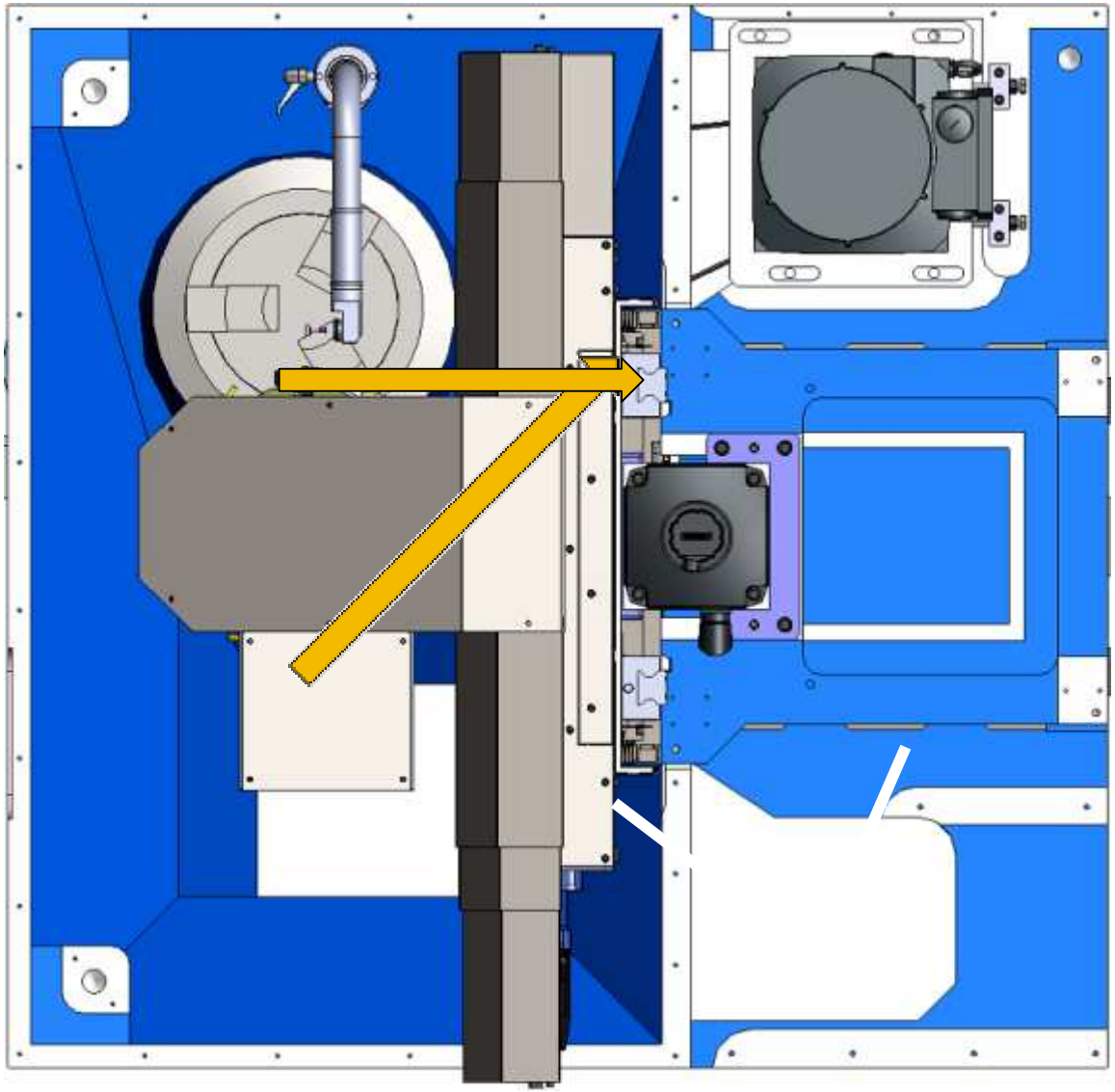

Illustrative image

ROMI

SEV-MF

Standard equipments

- Manual panel (handwheel) with Handwheel and JOG function for the axes.
- Coolant system
- Hydraulic unit (50 bar)
- Turret with servodrive with 12 positions / 12 tools
- Type T – for fixed tools with Romi standard (ROMI VTL 500R)
- Type M – for fixed tools and driven tools BMT-65 (ROMI VTL 500MR)
- Centralized lubrication system
- Cleaning sytem of the protections with pump = 5 bar

Optional

- Longitudinal Hinged belt chip conveyor (TCE)
- Longitudinal drag belt chip conveyor (TCA)
- Removable Tool setter.
- Air conditioning for electrical cabinet
- Hydraulic chuck Ø 315mm totally sealed
- Hydraulic chuck Ø 390mm totally sealed
- Coolant pump 5bar, 7 bar, 15 bar
- Autotransformer - 360 to 480VCA / 50-60Hz
- Automatic door
- Status light indicator
- Oil skimmer disc type with residues collect box
- Mist exhausting system
- Linear scale for X axis, Z axis and “X+Z Axes”
- Remote diagnosis interface
- Spindle sealing cover
- Two programmable pressures for fixing device cylinder
- Wash gun with additional pump
- Electronic Interface
- Preparation for mist exhausting

ROMI

SEV-MF

Tool setter

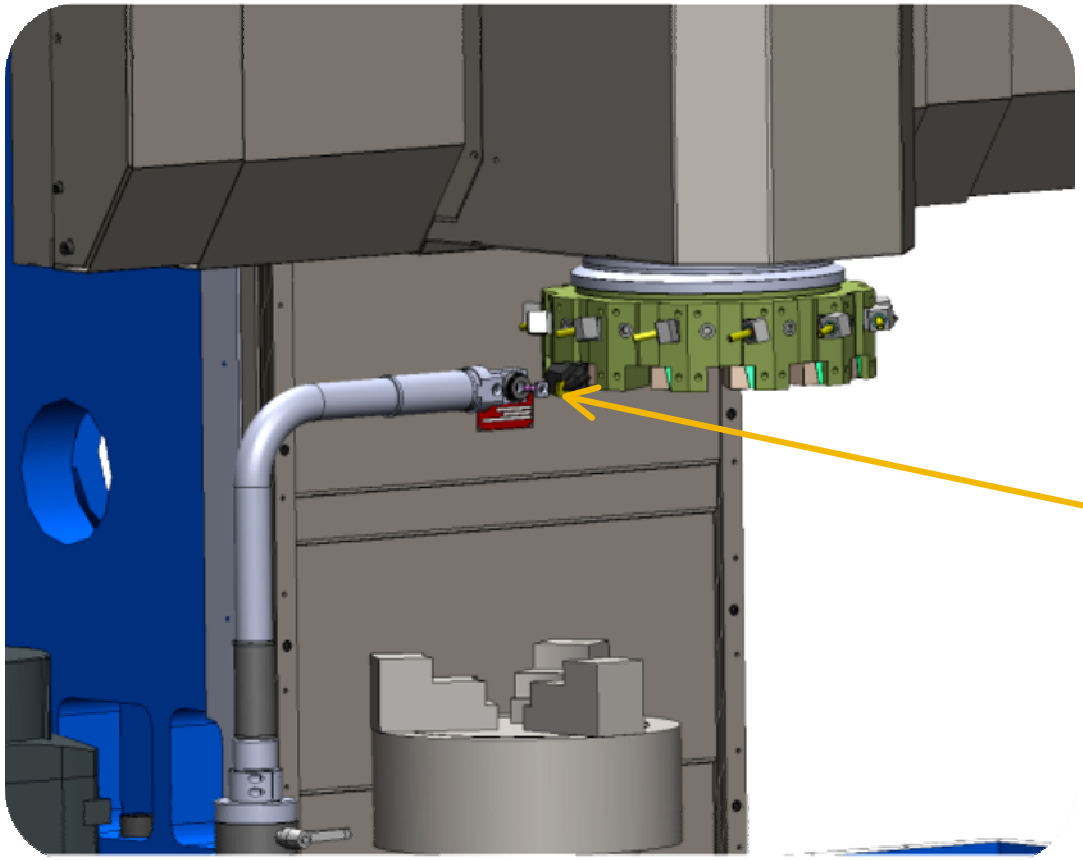

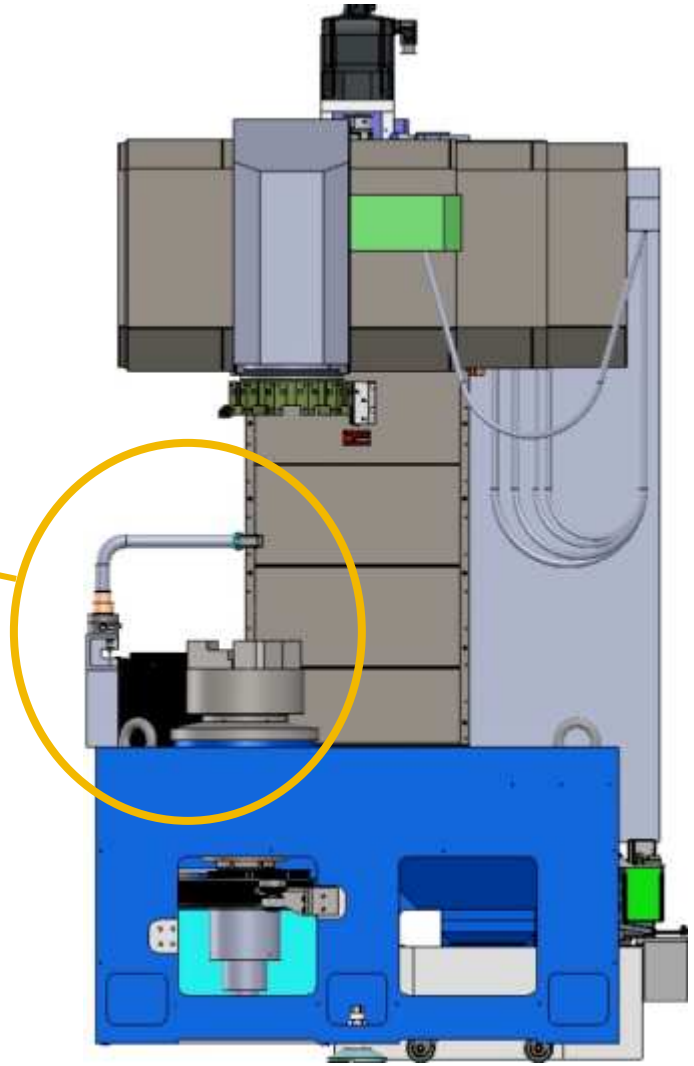

MARPOSS

- Manual tool setter **removable**

(same concept of ROMI GL 170G)

ROMI

SEV-MF

Turret “T” type, servo driven 12 position / 12 tools fixed with standard disc Romi.

External tool holder

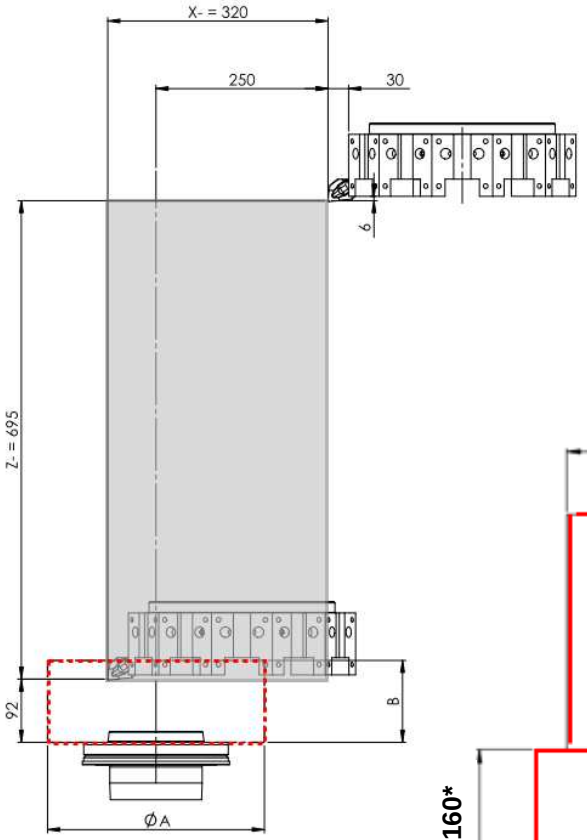

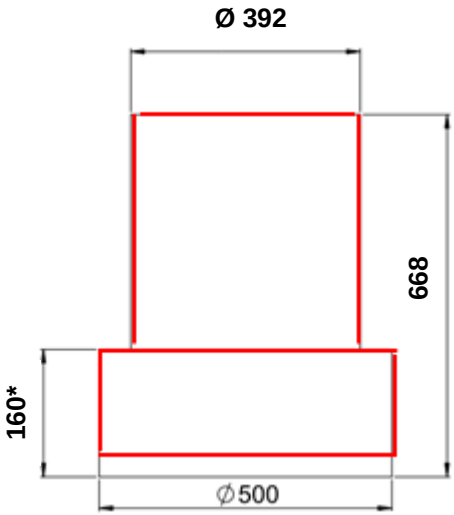

* Interference Àrea, if the length of the tool be more than 160 mm*

Frontal tool holder

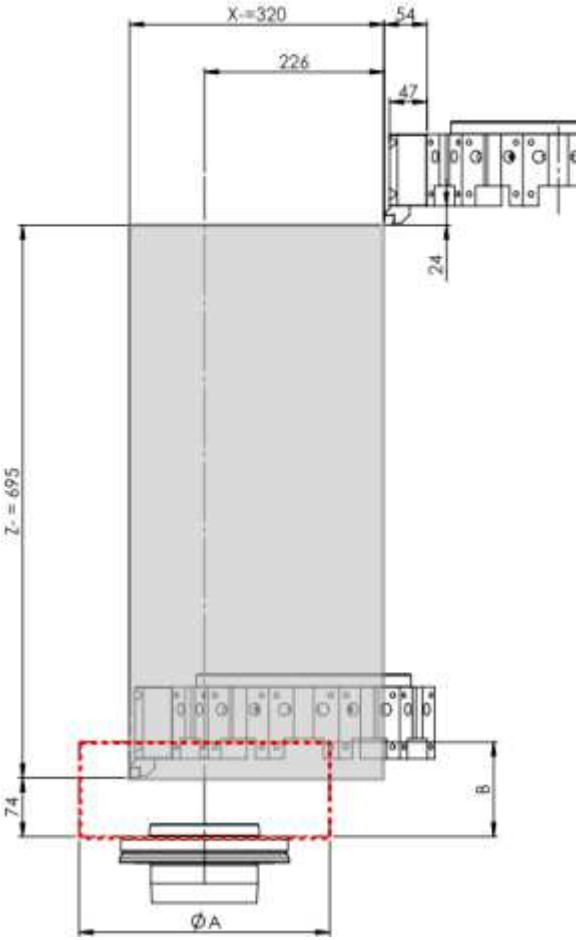

Internal Tool holder

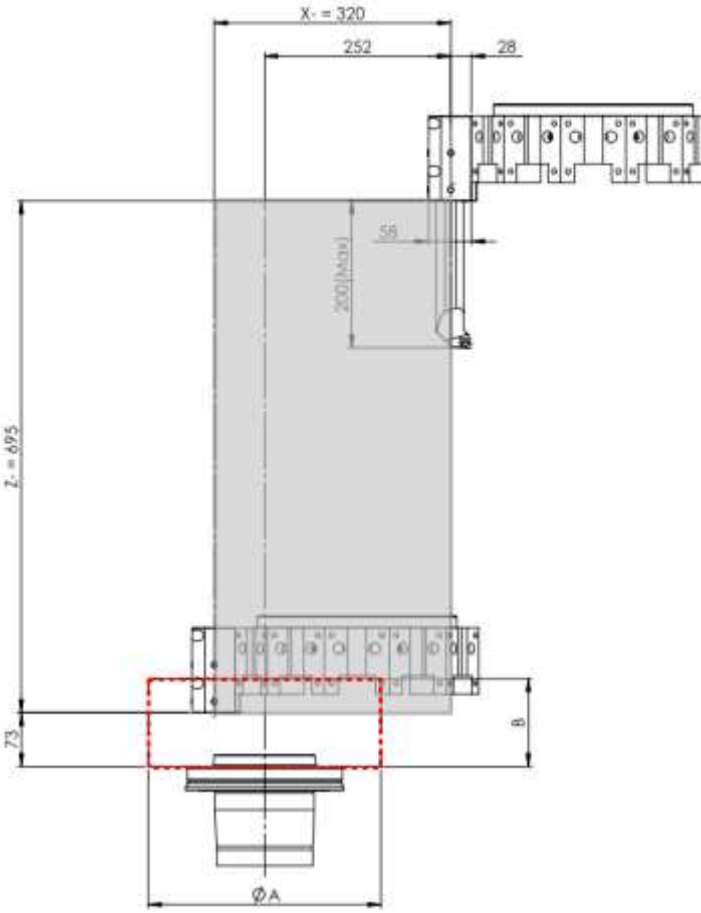

Chuck dimensions

ØA	B
315	119
390	140

ROMI

SEV-MF

Internal tool Layout

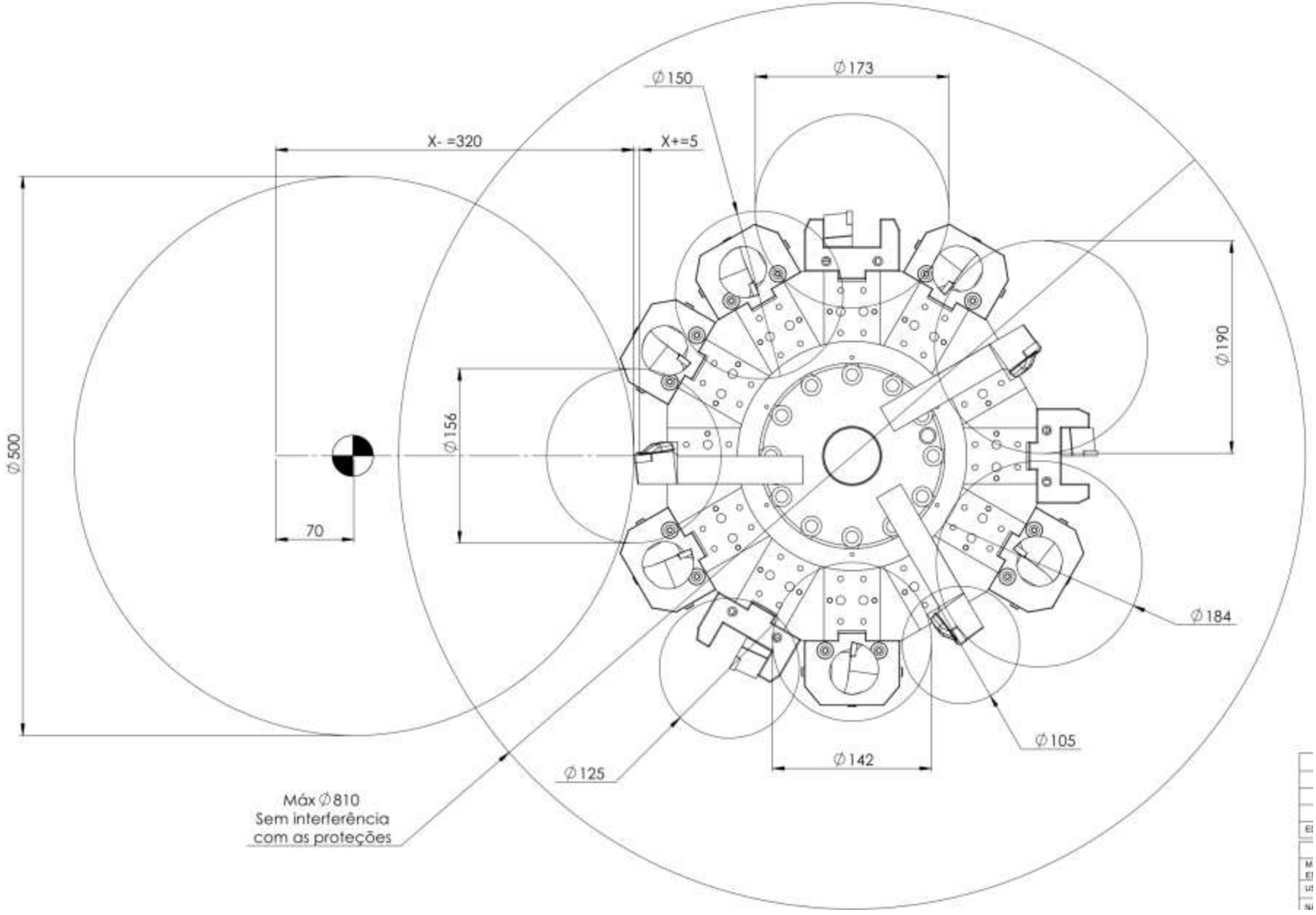

ROMI®

SEV-MF

Turret type “M” servo driven, 12 position / 12 tools fixed with standard disc BMT 65

External tool holder

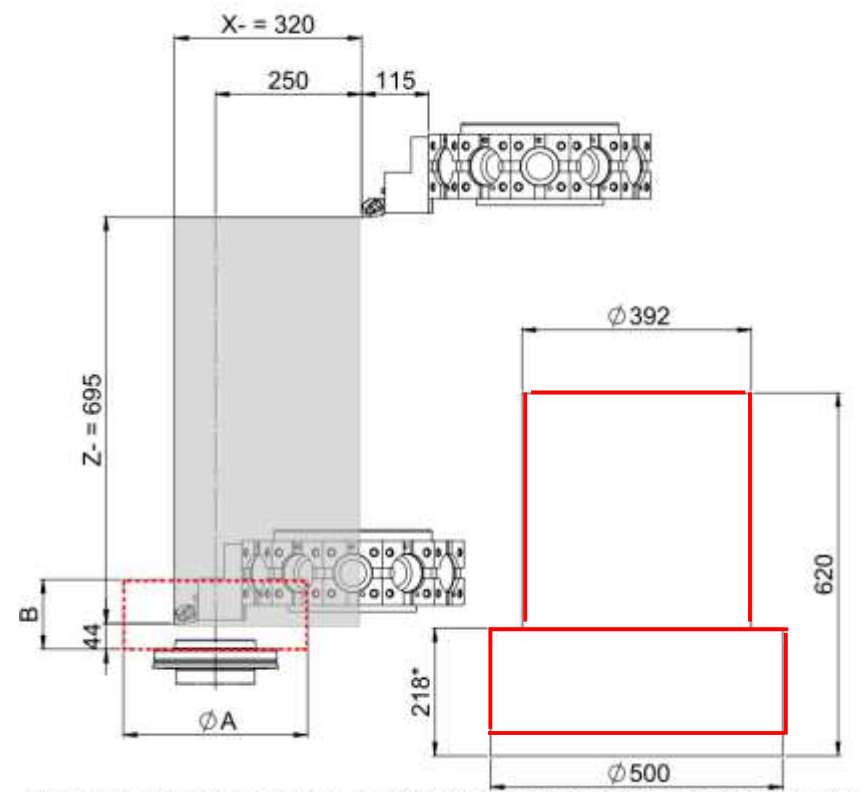

Internal Tool holder

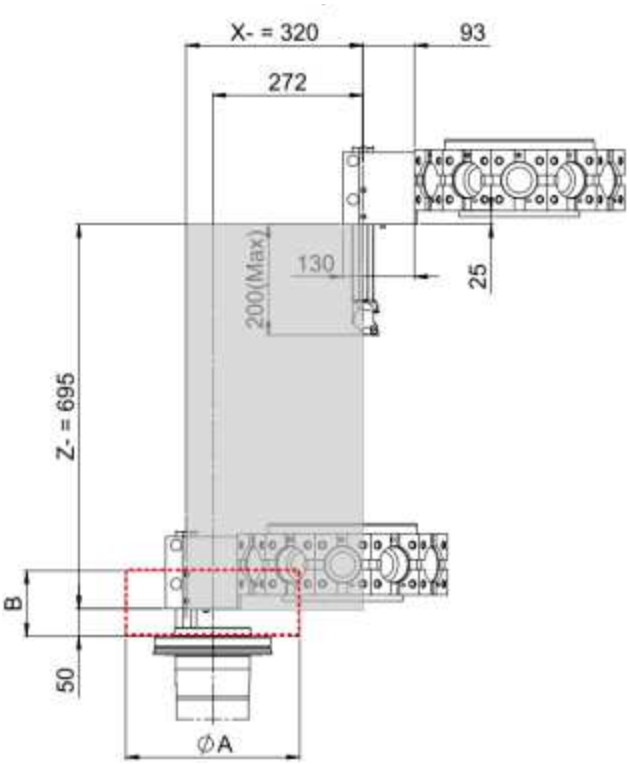

Frontal tool holder

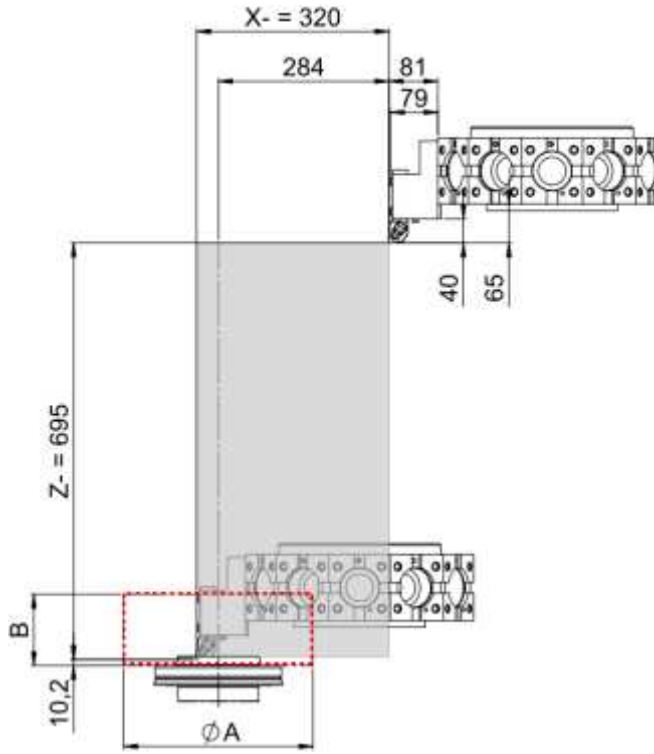

*** Interference Àrea, if the length of the tool be more than 218 mm***

Chuck dimensions

ØA	B
315	119
390	140

ROMI®

SEV-MF

Turret type “M” servo driven, 12 position / 12 tools fixed with standard disc BMT 65

Driven Tool holder - Radial

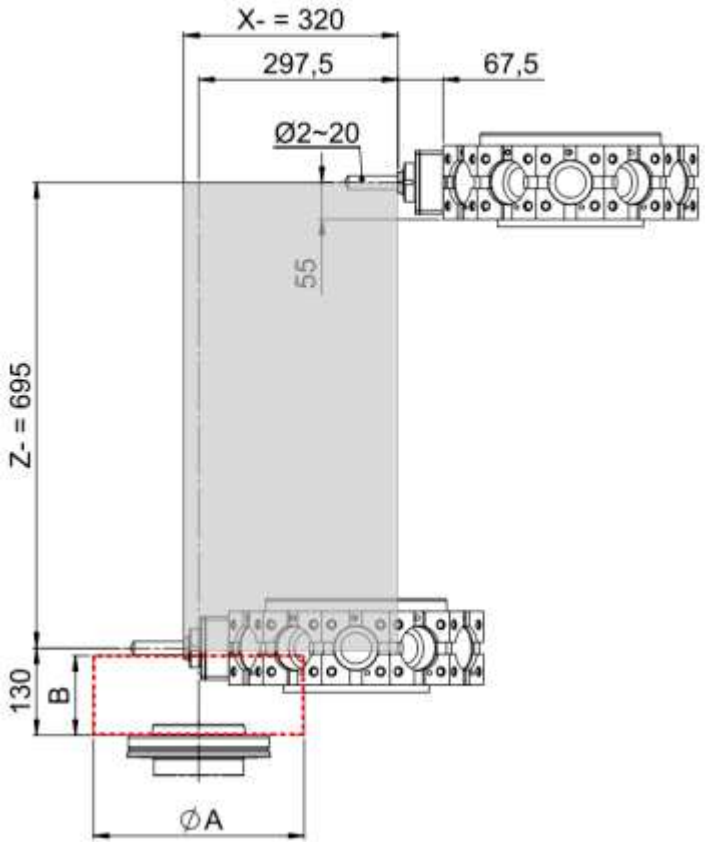

Driven Tool holder - Axial

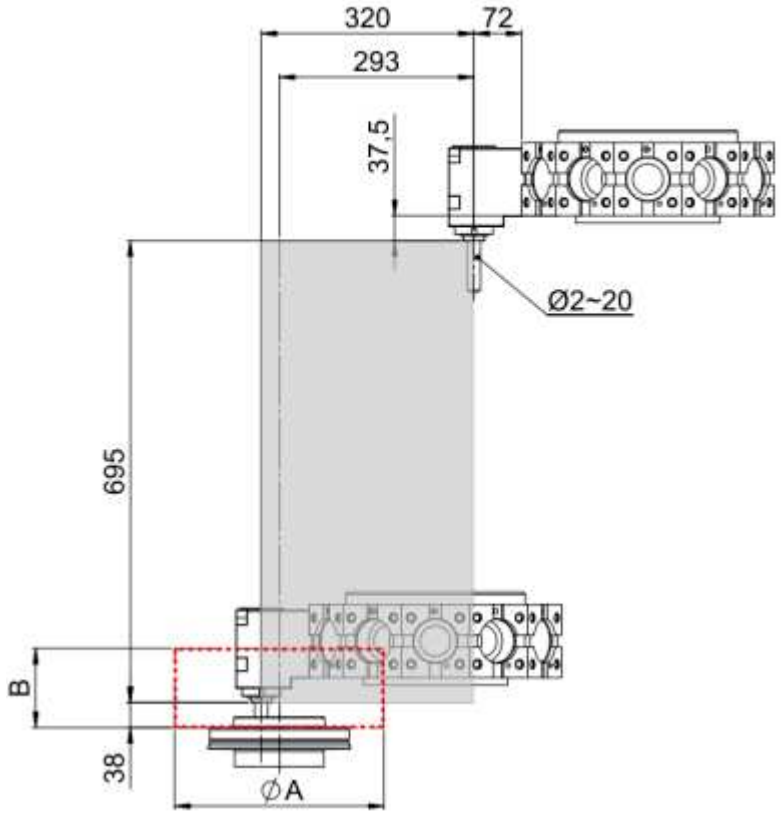

Chuck dimensions

ØA	B
315	119
390	140

Interference tool holder Layout

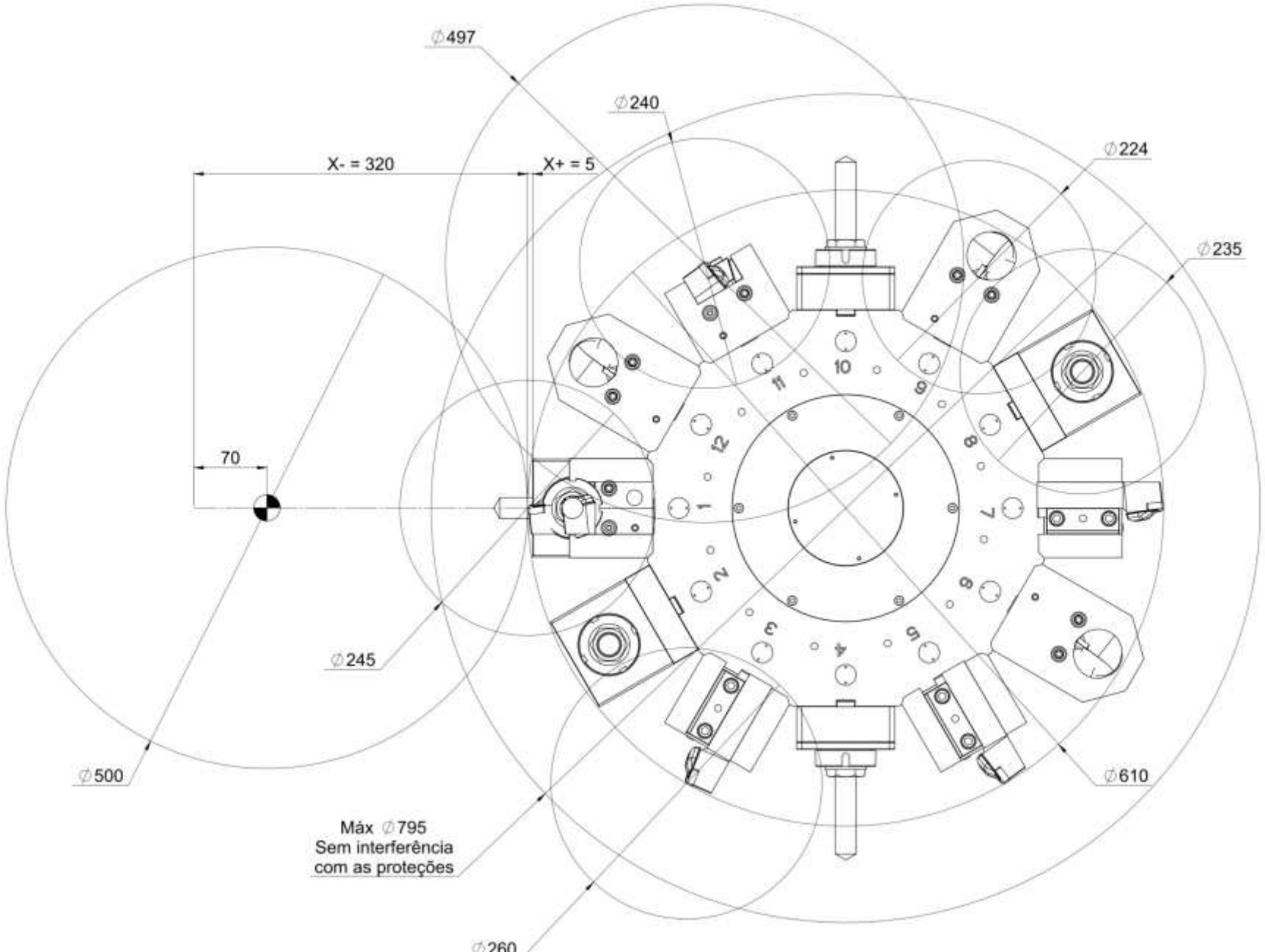

Loading example

Loading with crane

Unloading with crane for the right side

Machine with opening in the top, to facilitate the load and unload of heavy parts.

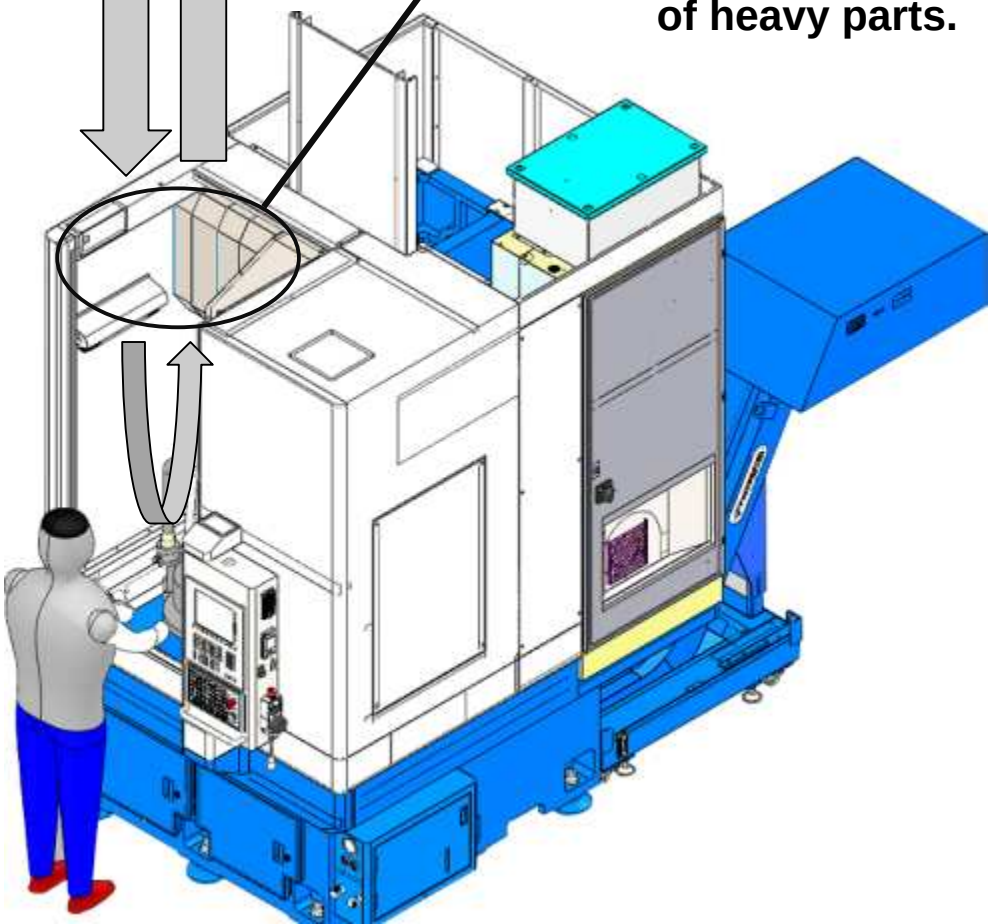

General Photos

ROMI

SEV-MF

Machining examples

* **Maximum diameter recommended:** Ø 390 mm
* M**aterials:** Several
* **Power:** 28 cv / 21 kW (VTL 500R / 500MR);
* **Maximum RPM:** 2.500 rpm (VTL 500R / 500MR)
* **Machining:** Roughing, finishing, facing, drilling, etc...

Aplicações:

ROMI

SEV-MF

Romi comparative

Techinical specification	GALAXY 30	C620	C680	ROMI VTL 500R	G 550	C830	C 1000
Swing over Bed	580	620	680	**620**	685	850	1.000
Swing over table	320	346	430	**500**	550	550	700

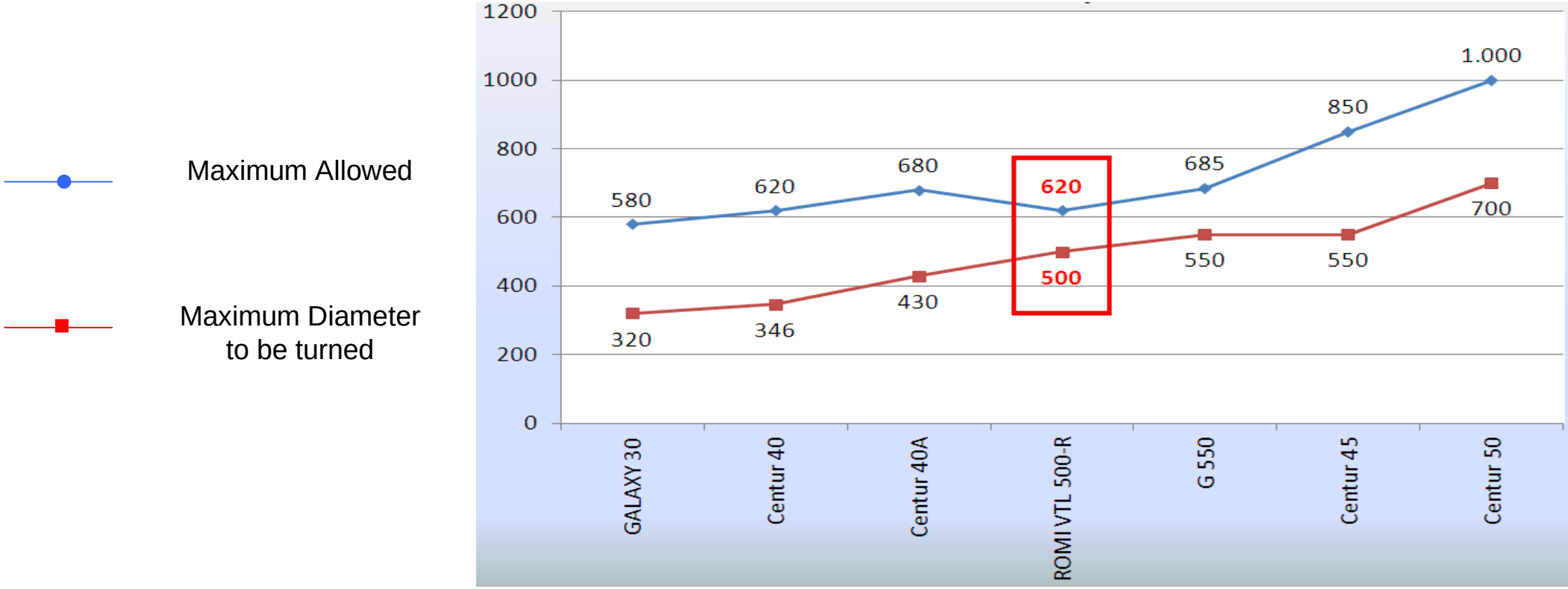

ROMI

SEV-MF

Romi Comparative

Manufacturer		DOOSAN	HYUNDAI	OKUMA	HWACHEON	ROMI
Técnical Features		**VT 450**	**SKTV5R/L**	**V40**	**VT450**	**VTL500-R**
Maximum diameter allowed	**mm**	**Ø 450**	**Ø 420**	**Ø 400**	**Ø 460**	**Ø 500**
Maximum diameter recommended	**mm**	**Ø 380**	**-**	**Ø 400**	**Ø 305**	**Ø 390**

Vertical Lathe x Horizontal Lathe

Facilities in the clamping of the “Chuck parts” in vertical lathes:

•Vertical positions facilitates the use of clips/fasteners for different parts geometry.

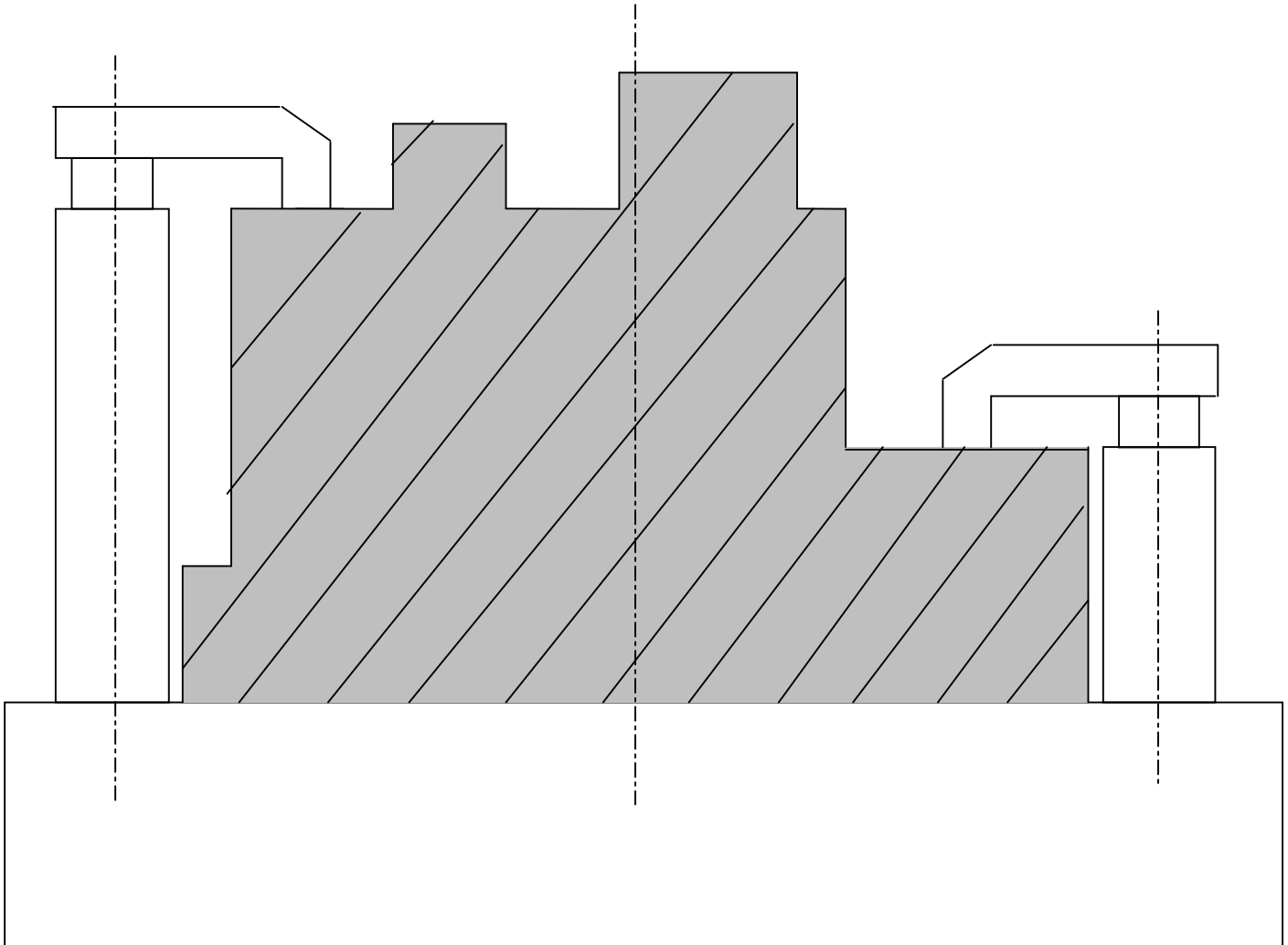

Comparative

Power Chart: Galaxy 30 x Romi VLT 500R

ROMI VTL 500R

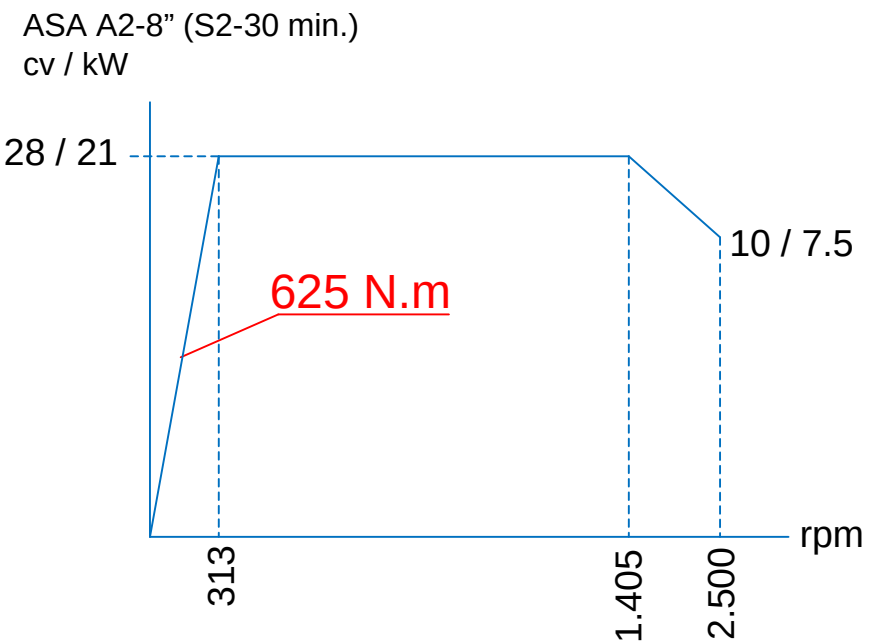

Galaxy 30 (STD)

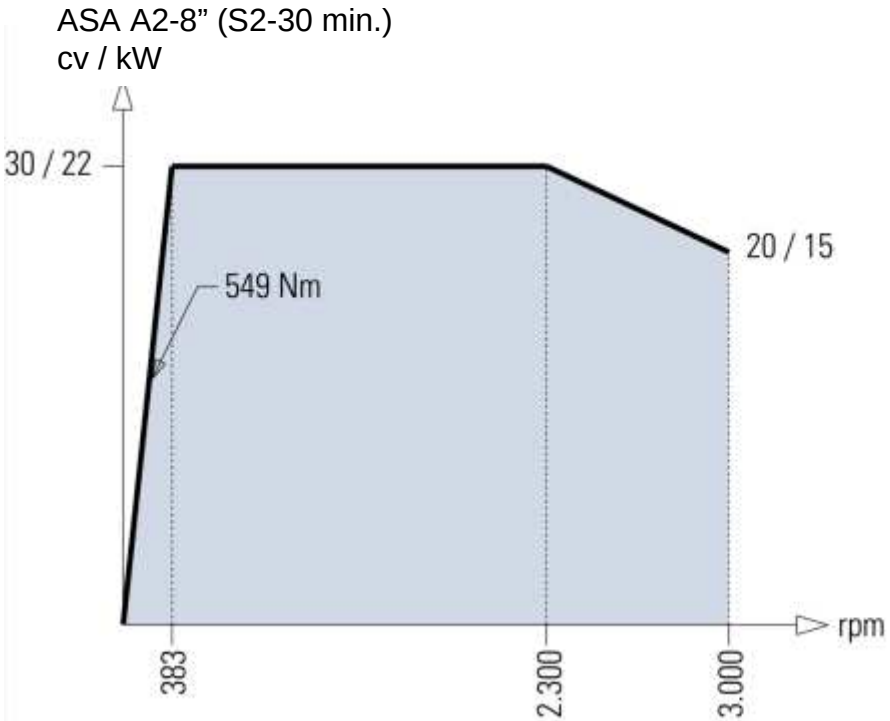

ADVANTEGES ROMI VTL 500R

Increase of **12% in the torque** (in comparison to the GALAXY 30)

Comparative

Area

Machine dimensions (with chip conveyor)		Area
C 680 x 1000	4,97 x 2,07	10,3 m²
GALAXY 30	4,96 x 1,9	9,4 m²
ROMI VTL 500R	**1,6 x 3,75**	**6 m²**

ROMI

SEV-MF

Technical comparative - Competitors

Manufacturer		DOOSAN	HYUNDAI	OKUMA	HWACHEON	ROMI
Technical features		**VT 450**	**SKTV5R/L**	**V40**	**VT450**	**VTL500R**
Maximum diamter allowed	mm	Ø 450	Ø 420	Ø 400	Ø 460	Ø 500
Maximum diamter recommended	mm	Ø 380	-	Ø 400	Ø 305	Ø 390
Maximum lenght allowed	mm	450	420	450	460	668
Headstock	ASA	A2-8"	A2-8"	A2-8"	A2-8"	A2-8"
Power	cv	37	25	30	30	28
Máx. RPM	rpm	2500	3000	2500	2500	2.500
Chuck Diameter	mm	Ø 304	Ø 304	Ø 304	Ø 304	Ø 315 Ø 390
Travel “X”	mm	240	315	265	260	325
Travel “Z”	mm	450	425	450	480	700
Maximum feedrate “X”	m/min	20	20	24	24	30
Maximum feedrate “Z”	m/min	20	24	24	20	30
Maximum Weight	kg	6.000	5800	7.200	7500	7.500

Next Version

ROMI VTL 500-L

ROMI VTL 500M-L

ROMI VTL 700-R/L ✓

ROMI VTL 700M-R/L ✓

Next Version

ROMI
A TRADITION OF INNOVATION